TRUE MANUFACTURING CO., INC.
U.S.A. FOODSERVICE DIVISION
2001 East Terra Lane • O'Fallon, Missouri 63366-4434 • (636)240-2400
Fax (636)272-2408 • Toll Free (800)325-6152 • Intl Fax# (001)636-272-7546
Parts Dept. (800)424-TRUE • Parts Dept. Fax# (636)272-9471 • www.truemfg.com

Project Name: _____
Location: _____
Item #: _____ *Qty:* _____
Model #: _____

AIA #
SIS #

Model:
FLM-81F~TSL01

Full Length Merchandiser:
Swing Door Freezer with Hydrocarbon Refrigerant~True Standard Look Version 01

FLM-81F~TSL01

- The world's #1 manufacturer of glass door merchandisers.
- Factory engineered, self-contained, capillary tube system using environmentally friendly R290 hydro carbon refrigerant that has zero (0) ozone depletion potential (ODP), & 0.02 global warming potential (GWP).
- High capacity, factory balanced refrigeration system that maintains -10°F (-23.3°C) temperatures. Ideal for both frozen foods and ice cream.
- Exterior - non-peel or chip black powder coated cold rolled steel ends with black aluminum cabinet top and back; durable and permanent.
- Interior - attractive, white aluminum interior liner with stainless steel floor.
- Double pane thermal insulated glass swing doors. Black powder coated.
- Full length doors for maximum product capacity.
- Self closing doors. Positive seal, torsion type closure system.
- LED interior lighting provides more even lighting throughout the cabinet. Safety shielded.
- Self-Cleaning technology eliminates the need for cleaning of condenser coil, reduces energy consumption and helps maintain the coldest temperature and freshest product.
- Entire cabinet structure is foamed-in-place using a high density, polyurethane insulation that has zero ozone depletion potential (ODP) and zero global warming potential (GWP).

Bottom mounted units feature

- "No stoop" lower shelf to maximize product visibility.
- Storage on top of cabinet.
- Easily accessible condenser coil for cleaning.

Exterior Color Options

Standard Black Exterior

Optional White Exterior

Optional Stainless Exterior

ROUGH-IN DATA

Specifications subject to change without notice.
Chart dimensions rounded up to the nearest ⅛" (millimeters rounded up to next whole number).

Model	Doors	Shelves	Cabinet Dimensions (inches) (mm) W	D†	H	HP	Voltage	Amps	NEMA Config.	Cord Length (total ft.) (total m)	Crated Weight (lbs.) (kg)
FLM-81F~TSL01	3	12	80¾ 2051	30⅜ 772	79 2007	(2)¾ N/A	115/60/1	14.2 N/A	5-20P	10 3.05	870 395

† Depth does not include 1⅝" (42 mm) for door handles.

MADE WITH INNOVATION IN THE USA · ENERGY STAR · c UL us · CLASSIFIED UL · natural refrigerant

8/25 Printed in U.S.A.

APPROVALS:

AVAILABLE AT:

Model:

FLM-81F~TSL01

Full Length Merchandiser:

Swing Door Freezer with Hydrocarbon Refrigerant~True Standard Look Version 01

STANDARD FEATURES

DESIGN

- True's commitment to using the highest quality materials and oversized refrigeration systems provides the user with colder product temperatures, and lower utility costs in an attractive merchandiser that brilliantly displays packaged food and beverages.

REFRIGERATION SYSTEM

- Factory engineered, self-contained, capillary tube system using environmentally friendly R290 hydrocarbon refrigerant that has zero (0) ozone depletion potential (ODP), & 0.02 global warming potential (GWP).
- High capacity, factory balanced refrigeration system that maintains -10°F (-23.3°C) temperatures. Ideal for both frozen foods and ice cream.
- State of the art, electronically commutated evaporator and condenser fan motors. ECM motors operate at higher peak efficiencies and move a more consistent volume of air which produces less heat, reduces energy consumption and provides greater motor reliability.
- Bottom mounted condensing unit positioned for easy maintenance. "No stoop" lower shelf maximizes visibility by raising merchandised product to higher level.

CABINET CONSTRUCTION

- Exterior - non-peel or chip black powder coated cold rolled steel ends with black aluminum cabinet top and back; durable and permanent.
- Interior - attractive, white aluminum liner with stainless steel floor.
- Insulation - entire cabinet structure is foamed-in-place using a high density, polyurethane insulation that has zero ozone depletion potential (ODP) and zero global warming potential (GWP).
- Welded, heavy duty steel frame rail, black powder coated for corrosion protection.
- Frame rail fitted with leg levelers.

DOORS

- Double pane thermal insulated glass swing doors with black powder coated frames.
- Door sign decal. Variety of decal options available.
- Each door fitted with 12" (305 mm) long extruded handle.
- Self closing doors. Positive seal, torsion type closure system.
- Magnetic door gaskets of one piece construction, removable without tools for ease of cleaning.

SHELVING

- Twelve (12) adjustable, solid white powder coated cantilever shelves, adjustable for up to 15° tilt in 5° increments. Three (3) white PVC coated wire floor racks.
- Shelves are 24½"L X 21"D (623mm x 534 mm). Floor racks are 22⅝"L X 20½"D (575mm x 591mm)

LIGHTING

- LED interior lighting provides more even lighting throughout the cabinet. Safety shielded.

MODEL FEATURES

- Evaporator is epoxy coated to eliminate the potential of corrosion.
- See our website www.truemfg.com for latest color and sign offerings.
- Convenient clean-out drain built in cabinet floor.
- NSF/ANSI Standard 7 compliant for packaged and bottled product.

ELECTRICAL

- Unit completely pre-wired at factory and ready for final connection to a 115/60/1 phase, 20 amp dedicated outlet.
- Unit utilizes a dual compressor system rated at ¾ HP each.
- Cord and plug set included.

115/60/1
NEMA-5-20R

OPTIONAL FEATURES/ACCESSORIES

Upcharge and lead times may apply.

- ❑ White exterior.
- ❑ Stainless steel exterior.
- ❑ Black aluminum interior liner with black shelving.
- ❑ Clear aluminum interior liner.
- ❑ Stainless steel interior liner.
- ❑ 5" (127mm) stemmed castors.
- ❑ All left hinge doors.
- ❑ All right hinge doors.
- ❑ Wired cantilever shelves.
- ❑ Barrel locks - located in grill assembly (requires one per door)
- ❑ Additional shelves.
- ❑ Product ID strips on shelves and floor racks.

PLAN VIEW

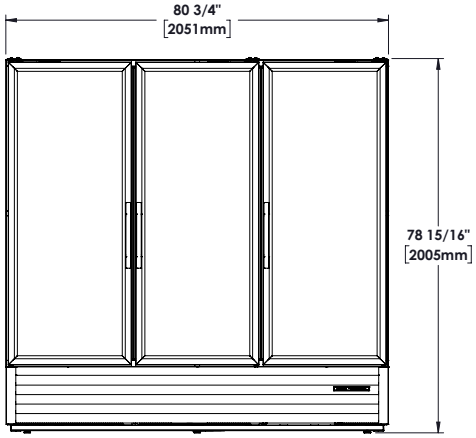

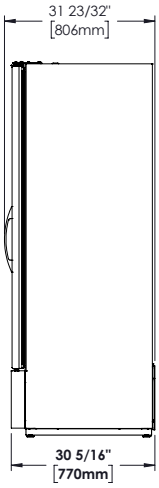

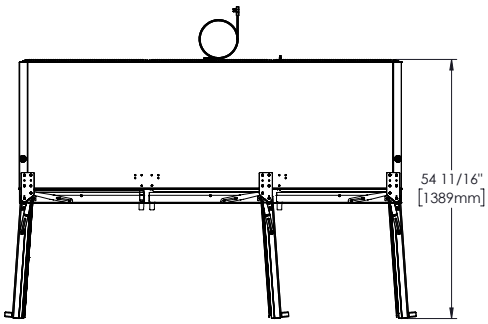

METRIC DIMENSIONS ROUNDED UP TO THE NEAREST WHOLE MILLIMETER

SPECIFICATIONS SUBJECT TO CHANGE WITHOUT NOTICE

Model	Elevation	Right	Plan	3D	Back
FLM-81F~TSL01					

TRUE MANUFACTURING CO., INC.

2001 East Terra Lane • O'Fallon, Missouri 63366-4434 • (636)240-2400 • Fax (636)272-2408 • Toll Free (800)325-6152 • Intl. Fax# (001)636-272-7546 • www.truemfg.com